TABULATION			
PART NO.	DESCRIPTION	GLOBAL FILTER MODEL NO.	DIMENSION A inches [mm]
21289-01	FLTR HSG ASSY, GSTL 1" TC, 222, 5" 304 SS		20.06 [509.5]
21289-02	FLTR HSG ASSY, GSTL 1" TC, 222, 5" 316 SS	GSTL051T2615EP	20.06 [509.5]
21289-03	FLTR HSG ASSY, GSTL 1" TC, 222, 10" 304 SS		24.98 [634.5]
21289-04	FLTR HSG ASSY, GSTL 1" TC, 222, 10" 316 SS	GSTL11T2615EP	24.98 [634.5]
21289-05	FLTR HSG ASSY, GSTL 1" TC, 222, 20" 304 SS		34.74 [882.5]
21289-06	FLTR HSG ASSY, GSTL 1" TC, 222, 20" 316 SS	GSTL21T2615EP	34.74 [882.5]
21289-07	FLTR HSG ASSY, GSTL 1" TC, 222, 30" 304 SS		44.59 [1132.5]
21289-08	FLTR HSG ASSY, GSTL 1" TC, 222, 30" 316 SS	GSTL31T2615EP	44.59 [1132.5]
21289-09	FLTR HSG ASSY, GSTL 1" TC, 222, 40" 304 SS		54.43 [1382.5]
21289-10	FLTR HSG ASSY, GSTL 1" TC, 222, 40" 316 SS	GSTL41T2615EP	54.43 [1382.5]

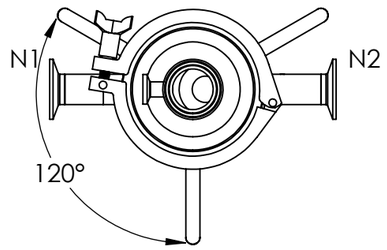

NOZZLE ORIENTATION

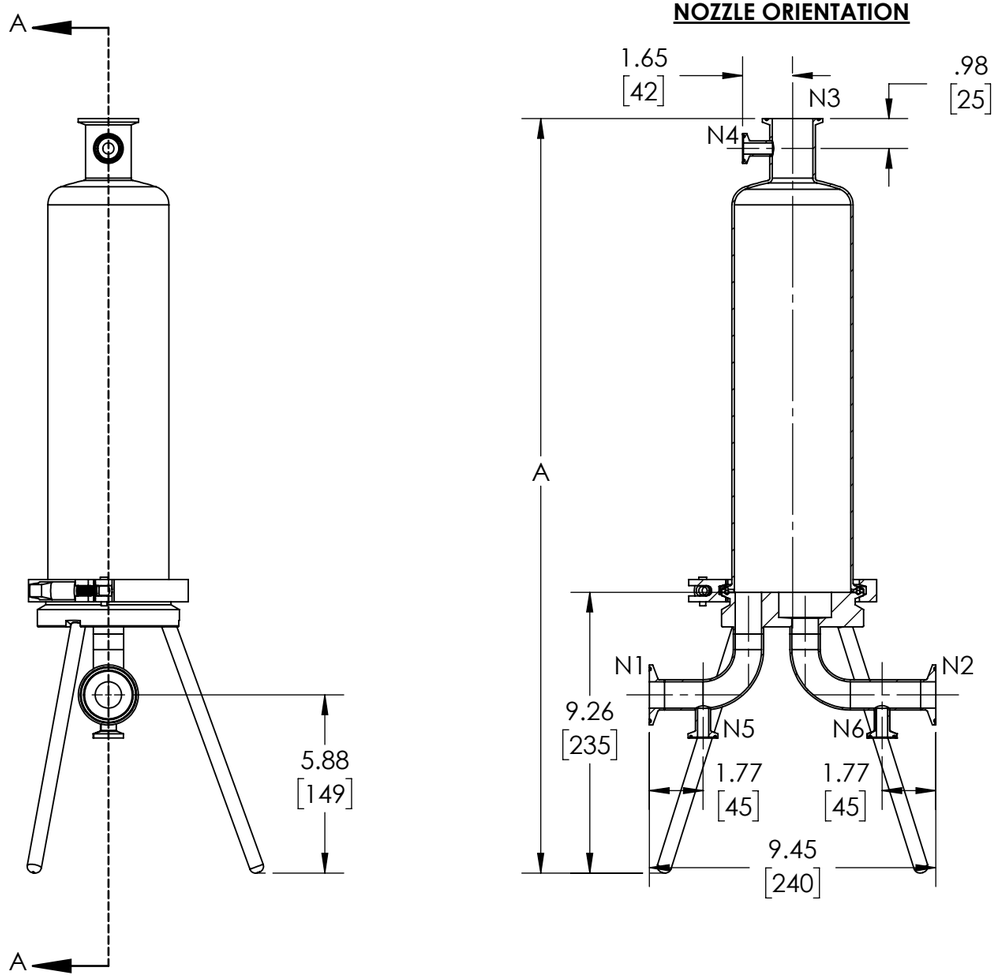

SECTION A-A
SCALE 1 : 5

NOZZLE SCHEDULE				
ITEM	SERVICE	SIZE	QTY	EXTERNAL FLANGE DIMENSION
N1	INLET	1"	1	ASME BPE V BAND CLAMP CONNECTION
N2	OUTLET	1"	1	ASME BPE V BAND CLAMP CONNECTION
N3	GAUGE PORT	1.5"	1	ASME BPE V BAND CLAMP CONNECTION
N4	AIR VENT	1/2"	1	ASME BPE V BAND CLAMP CONNECTION
N5	INLET DRAIN	1/2"	1	ASME BPE V BAND CLAMP CONNECTION
N6	OUTLET DRAIN	1/2"	1	ASME BPE V BAND CLAMP CONNECTION

DESIGN DATA	
DESIGN CODE	GOOD ENGR. PRACT.
DESIGN PRESS.	150 psi [10.5 Kg/cm²]
WORKING PRESS.	135 psi [9.5 Kg/cm²]
DESIGN TEMP	250° F [121°C]
HYDRO TEST	195 psi [13.7 Kg/cm²]
SUITABLE FOR	222/FIN TYPE CARTRIDGE

REFERENCE ENGINEERING DRAWING 21289

NOTES:
1. DIMENSIONS ARE IN INCHES [millimeters].
2. UNLESS TOLERANCES ARE INDICATED, ALL DIMENSIONS ARE REFERENCE.
3. SURFACE FINISH:
   - INSIDE: MIRROR POLISH WITH EP <25 µin Ra (<0.63 µm Ra)
   - OUTSIDE: MIRROR POLISH <25 µin Ra (<0.63 µm Ra)

PROPRIETARY AND CONFIDENTIAL
THE INFORMATION CONTAINED IN THIS DRAWING IS THE SOLE PROPERTY OF GLOBAL FILTER LLC. ANY REPRODUCTION IN PART OR AS A WHOLE WITHOUT THE WRITTEN PERMISSION OF GLOBAL FILTER LLC IS PROHIBITED.

REV	EC NUMBER
D	EC231121-01
C	EC210303-01
B	EC210107-01
A	EC201022-01
EC HISTORY	

MATERIAL

FINISH: SEE NOTE 3

	NAME	DATE
DRAWN BY	ME	10-22-20
ENG APPR.	EG	10-27-20

GLOBAL FILTER LLC

TITLE: FLTR HSG ASSY, GSTL 1" TC, 222, TAB

SIZE	DWG. NO.	REV
B	CS268	D

SCALE: 1:5 | WEIGHT: | SHEET 1 OF 1